Web Inspection System (FSP600)

With the OCS Web Inspection System FSP600, all types of irregularities in films, laminates and non-wovens can be detected in real time using high-speed cameras. They defects often reduce the quality of the film and the end product. These include gels, burners (black specks), fisheyes, holes, wrinkles, scratches, coating defects, water droplets, oil stains, insects, bubbles, nozzle marks and craters, etc.

Additional features of the FSP600 system are the data transfer of real-time results to the production and process control as well as product improvement by sorting/labelling contaminated web sections.

Testable Products

- Blown films, cast (flat) film and plate lines (PP, PET, PE, ABS, PC, PMMA, etc.)
- Coating films (aluminium, painted, etc.)
- Biaxial stretch films
- Surface protection films
- Medical and pharmaceutical films
- Optical films
- Food and barrier films
- Hygiene and nappy films, non-woven and laminates
- Technical films, etc.

Features

- Can be combined with transmission and reflection LEDs as well as dark and bright field applications
- Works with up to 6 channels simultaneously through MCE (Multi Channel Evaluation)
- LEDs can be controlled and triggered in sequence
- LEDs with passive cooling available in red, white, blue, UV or IR wavelengths, meeting the IP54

Sales Team

T +49 2302 95622-0
F +49 2302 95622-33
info@ocsgmbh.com
www.ocsgmbh.com

Address

OCS Optical Control Systems GmbH
Wullener Feld 24
58454 Witten
Germany

standard (water drop protection)

- Universal OPC-UA interface (BDE connection, connection of external sensors, e.g. metal detector, reading of machine parameters and CSV output)
- Simple Windows-based software with data management options and cut optimisation
- Teach-in of error references (teach-in function)
- Standardised classification of the film roll (calculation of marks)

Defects

Gels, fisheyes, holes, wrinkles, etc.

Technical Details

Camera	CMOS line scan camera, dual line, monochrome or trilinear coloured
Detection	Detection with up to 6 channels simultaneously (MCE – Multi Channel Evaluation) with one camera
Production speed	Up to 2,000 m/min
Inspection width	100–10,000 mm
Open interface	Easy integration of external devices (e.g. colour measurement), OPC Server Industry 4.0, easy data transfer to CSV

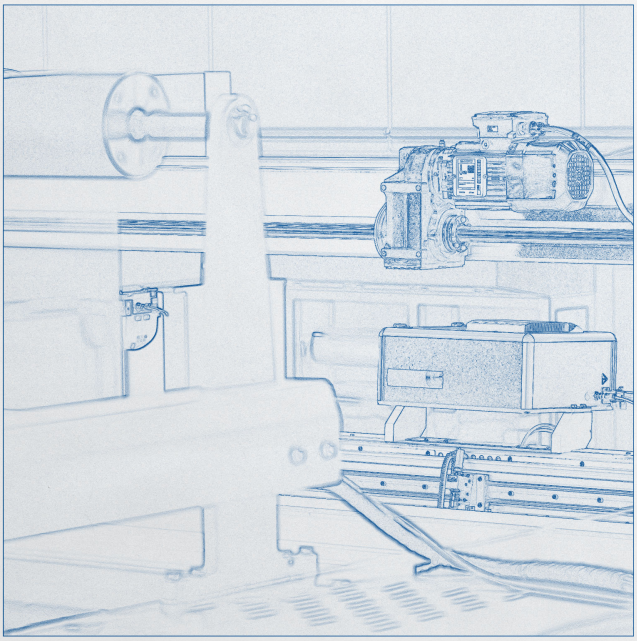

More Product Pictures

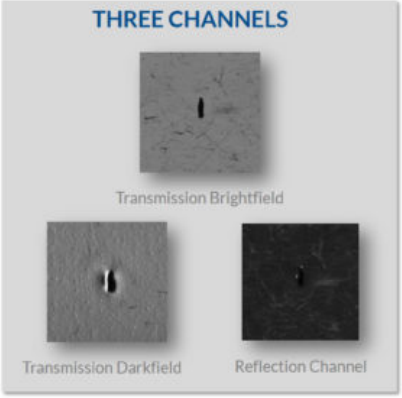

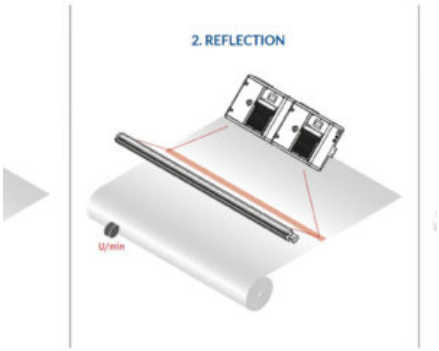

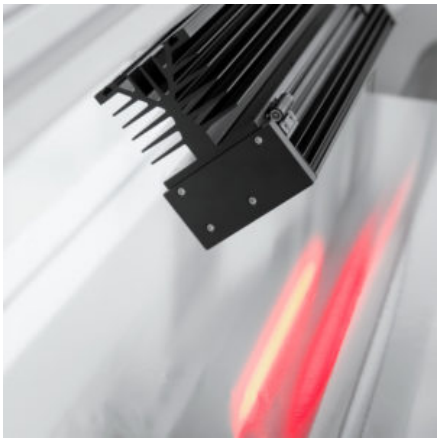

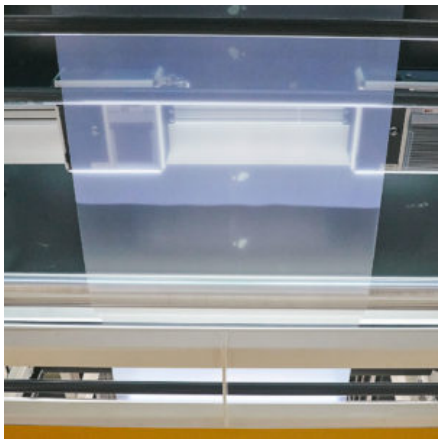

Similar Products

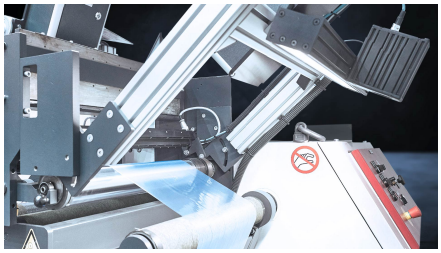

Purity Control OnRoll (PCR)

With the OCS Purity Control OnRoll (PCR), plastic films on the roll in the winder can be inspected and all types of contamination can be detected. Simple integration into the winder is possible. In addition, Purity Control OnRoll (PCR) can be implemented in the existing FSP600 system software or used as a stand-alone solution. PCR allows inspection widths of up to 10 metres. It is particularly suitable for flat, blown and cast films, biaxal stretch film, laminating and slitting lines. [vc_column width="1/2] Testable Products (Roll in the Winder) Blown films, cast (Flat) films and plates (PP, PET, PE, ABS, ... [read more on our Website]

Sample Tester (ST4)

The OCS Sample Tester (ST4) is a compact tabletop unit for the optical analysis of transparent and non-transparent surfaces, such as plastics, steel, paper, textiles and non-wovens, for irregularities and contamination. It is used in the laboratories of manufacturing companies as well as in research and development centres. The system can operate in reflection or transmission mode depending on the material. [vc_column width="1/2] Testable Raw Materials Transparent and non-transparent surfaces, such as plastics, steel, paper, textiles and non-wovens [vc_column width="1/2] Features Reflection or transmission mode depending on the material type Learning function for saving defined error types for later ... [read more on our Website]

Images, drawings and data are non-binding and subject to modification without prior notice. © 2024. All rights reserved - OCS Optical Control Systems GmbH | Wullener Feld 24 | 58454 Witten, Germany