Optical Control Systems



Cast Film Line

The OCS Cast Film Line is used to perform optical and physical property measurements of polymers in the production of high-quality cast (flat) films (extrusion, cooling, stripping and winding). All settings and parameters, e.g. extruder speed, temperature, film tension, winding force, winder diameter, are stored by a touch panel control system which guarantees that the film quality can be reproduced at any time. This is an important parameter for optical and physical on-/offline measurements, for example in detecting gels, contaminations, degradations and other impurities as well as haze, gloss, density and additive measurement.

Possible testable polymers include, for example, PP, PET, PC,HDPE and LDPE.

Testable Raw Materials

- Pellets, powders and flakes

Module I + II (included)

- Measuring Extruder (ME20/ME25/ME30/ME40/ME45) with fix lip die 50–150 mm or flex lip die 150–350 mm
- Modular Film Analyser with two chill rolls (MFA-CR)
- Film Surface Analyser (FSA100V2/FSA200V2)

Features

- Measuring Extruder (ME) comes with flexible height adjustment (infusion position)
- Maintenance and cleaning positions of the Measuring Extruder (ME) can be approached by means of an electric motor

Sales Team



T +49 2302 95622-0
F +49 2302 95622-33
info@ocsgmbh.com
www.ocsgmbh.com

Address

OCS Optical Control Systems GmbH
Wullener Feld 24
58454 Witten
Germany

- Modular architecture of the Modular Film Analyser (MFA) to facilitate customisation of additional measuring devices
- Operation via touch panel with data trend as well as optical and acoustic alarm functions
- All system parameters are monitored and saved in the touch panel control system
- Several options are available for data communication







Technical Details

Fix lip die	50–150 mm
Flex lip die	150–350 mm
Die gap	0.5–1.2 fix lip die, max. 2.0 mm flex lip die
Communication protocol	MODBUS (RTU, TCP/IP), PROFIBUS, PROFINET, OPC (Server/Client), CSV file, customer-specific

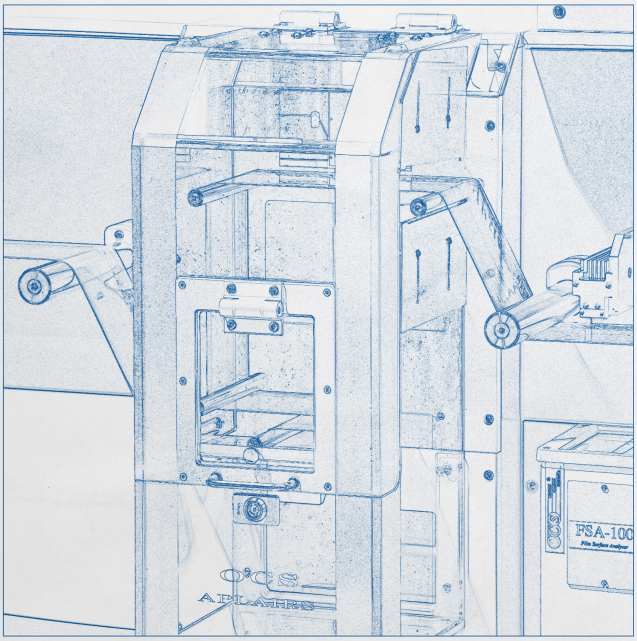

More Product Pictures







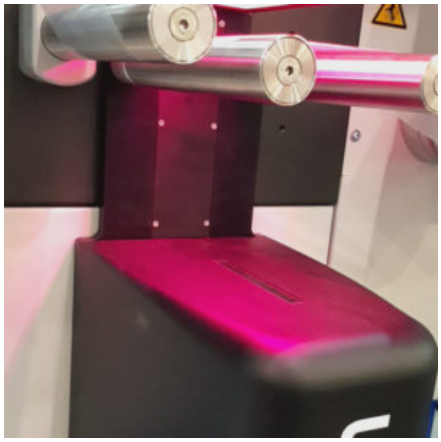











Similar Products



Measuring Extruder (ME20/ME25/ME30/ME40/ME45)

The OCS Measuring Extruder (ME) is used for the production of polymer films for laboratory and small series production. The extruder is equipped with a flat film die and, if necessary, a downstream OCS Modular Film Analyser to enable further quality measurements. The system is controlled via a touch panel to set up device parameters and recipes. In addition, the optional Remote Control Function allows the Measuring Extruder (ME) to be displayed and controlled from various locations. Another feature is the automatic turning system, which allows easy cleaning of the extruder barrel, die and screw. The extruder then automatically returns ... [read more on our Website]



Modular Film Analyser (MFA)

The OCS Modular Film Analyser (MFA) is used for the continuous cooling, stripping and winding of extruded polymer film. In combination with a variety of different measuring instruments, a wide range of applications for the analysis of different sample materials is covered. In addition to the Film Surface Analyser (FSA100V2/FSA200V2) for optical quality control of the polymer film, online spectroscopy, the measurement of haze and transmission as well as gloss and thickness can be integrated. This allows the combination of a tailor-made and yet economical solution. [vc_column width="1/2"] Features Modular architecture for customer-specific configuration with different measurement devices Homogeneous, yet ... [read more on our Website]



Film Surface Analyser (FSA100V2/FSA200V2)

The OCS Film Surface Analyser (FSA100V2/FSA200V2) is a modular optoelectronic inspection system for polymer films. It can be used in the laboratory as well as in the running production process. The film is inspected by means of a high-resolution CMOS line camera and a user-specific, high-power LED. This combination enables optimal defect detection in transparent, opaque and coloured polymer films. In the FSA100 software, the measurement results are analysed according to user-specific requirements, defects are classified and the film quality is determined. The FSA100V2 can be combined with other OCS film inspection systems. This combination provides additional measurement results, ... [read more on our Website]



Film Thickness Measurement (FTM)

The OCS Film Thickness Measurement (FTM) allows the continuous measurement of the thickness of polymer film (flat film, blown film or tape). For measurement, the film is guided between two precision rollers. One of the rollers is deflected according to the film thickness. This deflection is measured by a digital probe and evaluated by microcontroller-based electronics. The measured value is shown on a display and can be evaluated via analogue or digital interfaces. [vc_column width="1/2"] Measurable Materials Polymer films Features Continuous thickness measurement of the polymer film [vc_column width="1/2"] Optional Customer-specific data preparation and transfer Remote control

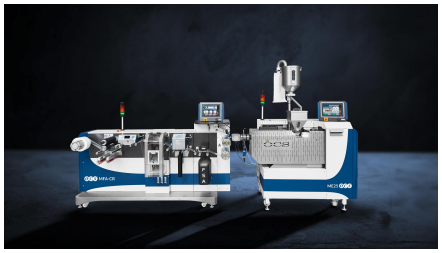

Gloss Measurement (OGM)

The OCS Gloss Measurement (OGM) is designed for the constant and precise control of film gloss properties. The measuring device is integrated into the Modular Film Analyser (MFA). It enables a continuous measurement of the gloss value on polymer film. The gloss properties of films are analysed based on their different ability to reflect light. A special LED lighting unit illuminates the continuous film while a photo diode measures the strength of the reflected light. The measured amount of gloss, from matt to glossy, is given in GU (Gloss Units). [vc_column width="1/2"] Measurable Materials Polymer films Features Robust, precise measuring ... [read more on our Website]

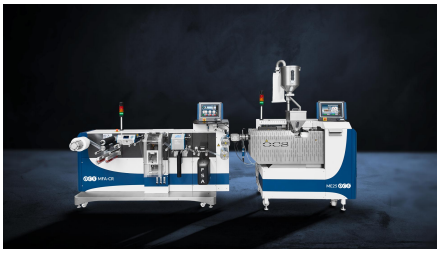

Haze and Transmission Measurement (OHM)

The OCS Haze and Transmission Measurement (OHM) is used for the automated and continuous measurement of the haze properties on polymer film. It additionally determines the transmission average. The measuring instrument is integrated into the Modular Film Analyser (MFA) or can be used as a stand-alone version (tabletop unit). [vc_column width="1/2"] Features Continuous haze and transmission measurement according to ASTM D 1003 Simple multi-point calibration [vc_column width="1/2"] Compatible with OCS Cast Film Line OCS Blown Film Line OCS Modular Film Analyser (MFA) ... [read more on our Website]

(via communication protocol ... [read more on our Website]

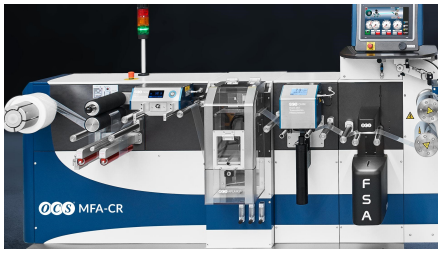

Spectroscopical Measurement APLAIRS®

APLAIRS® (Analysis of Plastics by InfraRed Spectroscopy) is a spectroscopic method for measuring additives, (co-)monomer compositions and chemical and physical properties in the production of polyolefins. This concept allows the automation of the daily continuous measurement requirements for quality control. For this purpose, the polymer film runs through the APLAIRS® system, which is equipped with an FTIR spectrometer and specially developed software. The measurement takes place in real time. The spectra are recorded and properties are predicted, documented and graphically processed. The results can also be transferred to superordinate systems. This ensures continuous quality control and documentation and the resulting ... [read more on our Website]



Pellet Transport System (PTS)

The OCS Pellet Transport System (PTS) is a control system that ensures the continuous and automatic transport of plastic granules (pellets) between production lines and measuring systems. The pellets from the production line are removed by pneumatic samplers. The samples are transported through special conveyor pipes, distributed and fed to the corresponding measuring system. This ensures a gentle transport of the pellets to avoid dust and streamers. Features Individual and fully automated transport system for supplying the measuring systems Enables timely readjustment in case of parameter variations (minimisation of scrap) Simple operation via touch panel with optical and acoustic ... [read more on our Website]

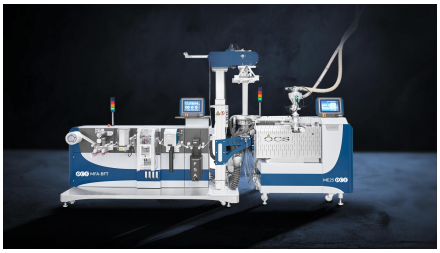

Blown Film Line

The OCS Blown Film Line is used to carry out optical and physical property measurements of polymers in the production of high-quality blown films (blowing, cooling, laying flat, haul-off and winding). All parameters of the line, e.g. extruder speed, temperature, haul-off speed, film width, film bubble ratio, are stored by a touch panel control system, which ensures that the film quality is reproducible at any time. This is an important parameter for optical and physical on-/offline measurements, for use with gels, impurities, fibres and other contaminants, as well as for turbidity, transmission, gloss, density and additive measurements. Possible testable polymers ... [read more on our Website]

Images, drawings and data are non-binding and subject to modification without prior notice. © 2026. All rights reserved - OCS Optical Control Systems GmbH | Wullener Feld 24 | 58454 Witten, Germany